Cambridge Assessment International Education

Cambridge International AS & A Level

CANDIDATE NAME									
CENTRE NUMBER						CANDIDATE NUMBER				

9095492107

PHYSICS **9702/33**

Paper 3 Advanced Practical Skills 1 **May/June 2021**

2 hours

You must answer on the question paper.

You will need: The materials and apparatus listed in the confidential instructions

INSTRUCTIONS

- Answer **all** questions.
- Use a black or dark blue pen. You may use an HB pencil for any diagrams or graphs.
- Write your name, centre number and candidate number in the boxes at the top of the page.
- Write your answer to each question in the space provided.
- Do **not** use an erasable pen or correction fluid.
- Do **not** write on any bar codes.
- You will be allowed to work with the apparatus for a maximum of 1 hour for each question.
- You should record all your observations in the spaces provided in the question paper as soon as these observations are made.
- You may use a calculator.
- You should show all your working and use appropriate units.

INFORMATION

- The total mark for this paper is 40.
- The number of marks for each question or part question is shown in brackets [ ].

For Examiner's Use	
1	
2	
Total	

This document has **12** pages. Any blank pages are indicated.

© UCLES 2021

PapaCambridge

You may not need to use all of the materials provided.

1 In this experiment, you will investigate an electrical circuit.

(a) You have been provided with two identical wooden strips labelled A and B.

Measure and record the length *L* of the wire between the nails on strip A, as shown in Fig. 1.1.

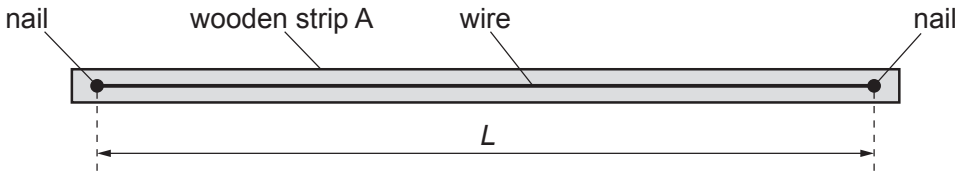

Fig. 1.1

L = ... [1]

© UCLES 2021

PapaCambridge

(b) ● Set up the circuit shown in Fig. 1.2.

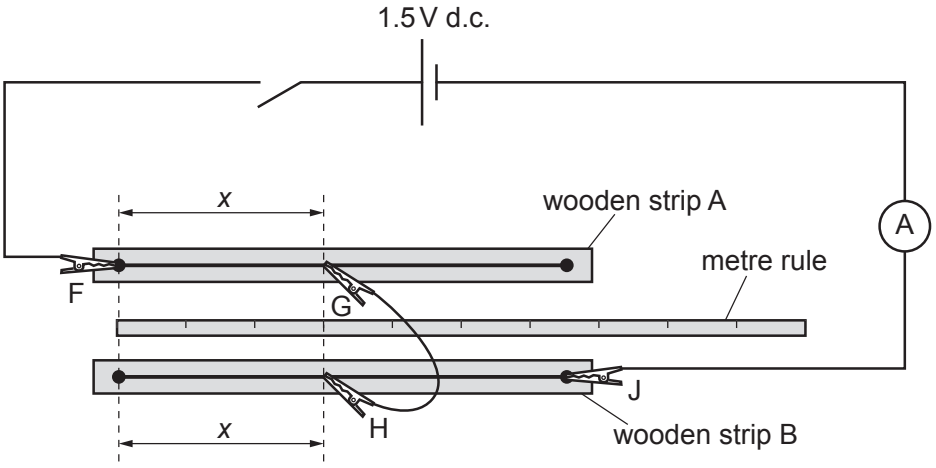

Fig. 1.2

- F, G, H and J are crocodile clips.

  Attach G to the wire on wooden strip A so that the distance *x* between the nail on strip A and G is approximately 30 cm, as shown in Fig. 1.2.

- Attach H to the wire on wooden strip B so that it is the same distance *x* from the nail on strip B.

- Close the switch.

- Record *x* and the ammeter reading *I*.

  x = ...

  I = ...

- Open the switch.

[1]

PapaCambridge

(c) Vary x and repeat **(b)** until you have six sets of readings of x and I. Include your values from **(b)**.

Record your results in a table. Include values of $\frac{1}{I}$ in your table.

[9]

(d) (i) Plot a graph of $\frac{1}{I}$ on the y-axis against x on the x-axis. [3]

(ii) Draw the straight line of best fit. [1]

(iii) Determine the gradient and y-intercept of this line.

gradient = ...

y-intercept = ...

[2]

© UCLES 2021

PapaCambridge

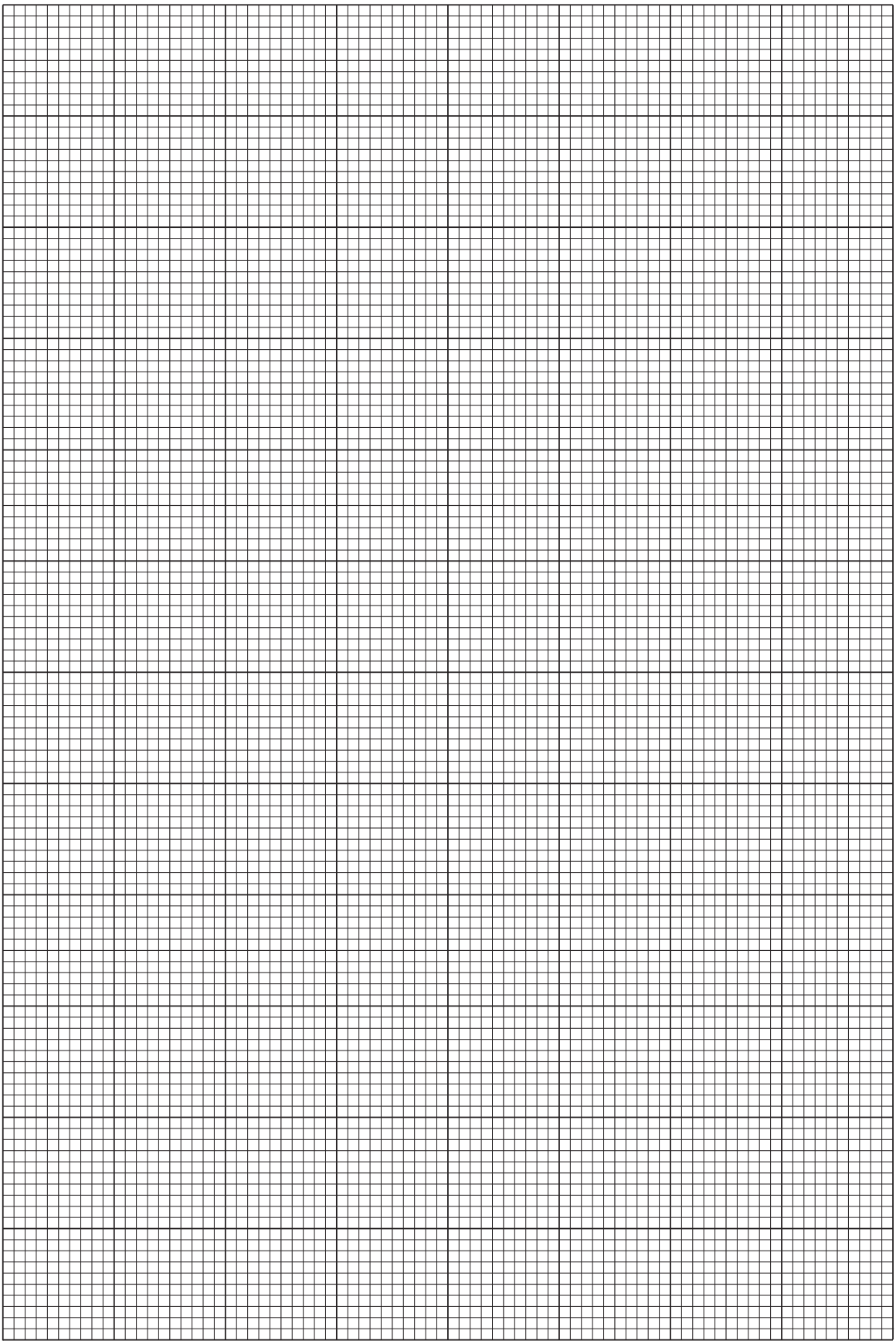

© UCLES 2021

[Turn over

PapaCambridge

(e) It is suggested that the quantities I and x are related by the equation

$$\frac{1}{I} = Px + Q$$

where P and Q are constants.

Using your answers in **(d)(iii)**, determine values for P and Q.
Give appropriate units.

P = ...

Q = ...
[2]

(f) Theory suggests that

$$\frac{P}{Q} = \frac{\left(\frac{\rho_A}{\rho_B} - 1\right)}{L}$$

where ρ_A is the resistivity of the wire on strip A and ρ_B is the resistivity of the wire on strip B.

Calculate $\frac{\rho_A}{\rho_B}$.

$\frac{\rho_A}{\rho_B}$ = ... [1]

[Total: 20]

© UCLES 2021

PapaCambridge

You may not need to use all of the materials provided.

2 In this experiment, you will investigate the oscillations of a loaded wooden strip.

(a) You have been provided with a rectangular wooden strip with a hole in its centre.

- Use some of the adhesive putty to attach the two 100 g masses as near as possible to one end of the strip, as shown in Fig. 2.1 and Fig. 2.2.

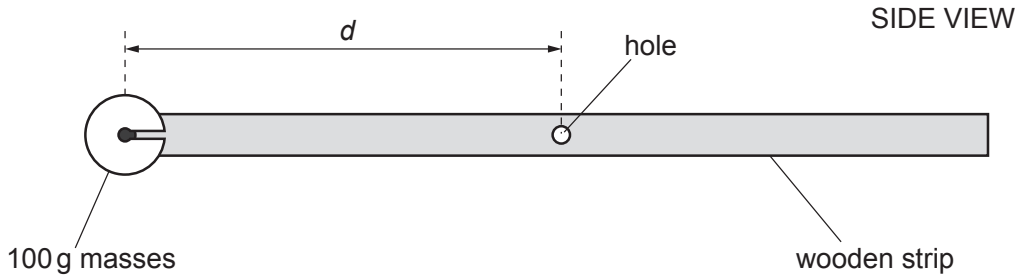

Fig. 2.1

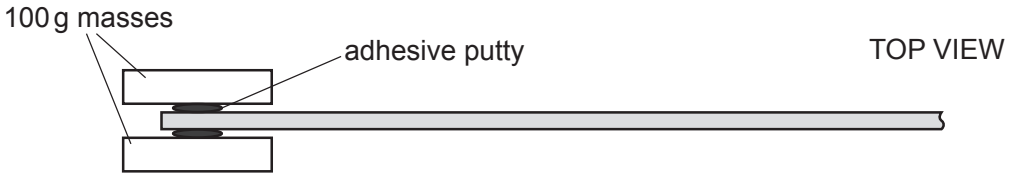

Fig. 2.2

- The distance between the centre of the masses and the hole is *d*, as shown in Fig. 2.1.

  Measure and record *d*.

d = ... [1]

(b) Estimate the percentage uncertainty in your value of *d*. Show your working.

percentage uncertainty = ... [1]

© UCLES 2021

[Turn over

PapaCambridge

(c) (i)

- Attach the two 50 g masses to the other end of the strip so that the distance between the centres of these masses and the hole is also equal to *d*.
- Set up the apparatus as shown in Fig. 2.3.

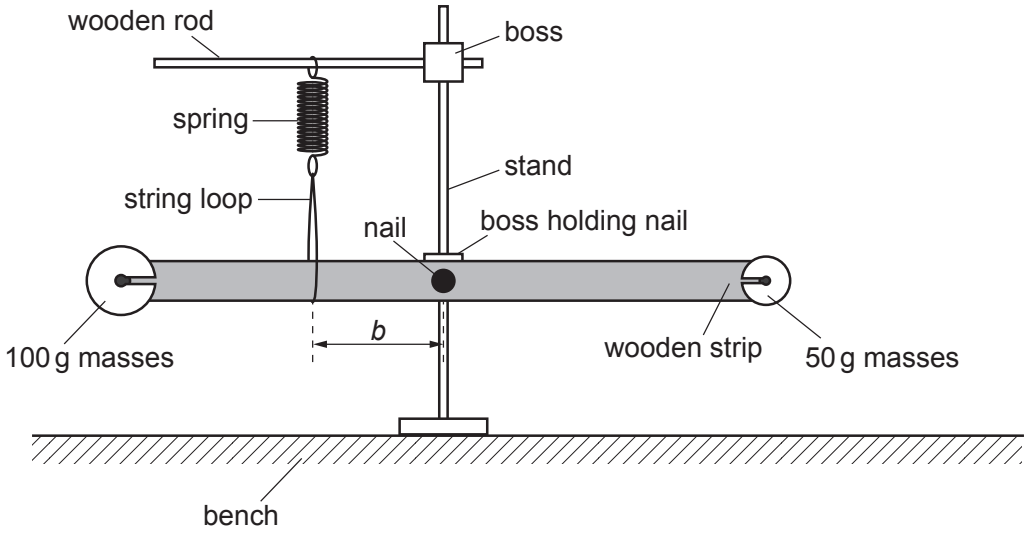

Fig. 2.3 (not to scale)

- The distance between the string loop and the nail in the centre of the strip is *b*. Adjust the position of the string loop and spring until *b* is approximately 10 cm.
- Adjust the heights of the bosses until the strip is horizontal and the spring and string loop are vertical.
- Measure and record *b*.

b = ... [1]

(ii) Calculate α where

$$\alpha = \frac{b}{d}.$$

α = ... [1]

(iii) Justify the number of significant figures that you have given for your value of α.

.....

.....

..... [1]

PapaCambridge

(d)
- Move the end of the strip with the 100 g masses down through a short distance.
- Release the end of the strip. The strip will oscillate up and down.
- Take measurements to determine the period T of these oscillations.

T = ... [2]

(e)
- Change the value of b to approximately 20 cm.
- Adjust the heights of the bosses until the strip is horizontal and the spring and string loop are vertical.
- Measure and record b.

b = ...

- Repeat **(c)(ii)** and **(d)**.

α = ...

T = ...
[2]

PapaCambridge

(f) It is suggested that the relationship between T and α is

$$T = \frac{C}{\alpha}$$

where C is a constant.

(i) Using your data, calculate two values of C.

first value of C = ...

second value of C = ...
[1]

(ii) Explain whether your results support the suggested relationship.

.....

.....

.....

..... [1]

(g) Theory suggests that

$$C = 2\pi\sqrt{\frac{3m}{k}}$$

where m is 0.100 kg and k is the spring constant of the spring.

Use your second value of C to determine a value for k. Give an appropriate unit.

k = ... [1]

© UCLES 2021

PapaCambridge

(h) (i) Describe four sources of uncertainty or limitations of the procedure for this experiment.

1. .....

.....

2. .....

.....

3. .....

.....

4. .....

.....

[4]

(ii) Describe four improvements that could be made to this experiment. You may suggest the use of other apparatus or different procedures.

1. .....

.....

2. .....

.....

3. .....

.....

4. .....

.....

[4]

[Total: 20]

© UCLES 2021

PapaCambridge

BLANK PAGE

Permission to reproduce items where third-party owned material protected by copyright is included has been sought and cleared where possible. Every reasonable effort has been made by the publisher (UCLES) to trace copyright holders, but if any items requiring clearance have unwittingly been included, the publisher will be pleased to make amends at the earliest possible opportunity.

To avoid the issue of disclosure of answer-related information to candidates, all copyright acknowledgements are reproduced online in the Cambridge Assessment International Education Copyright Acknowledgements Booklet. This is produced for each series of examinations and is freely available to download at www.cambridgeinternational.org after the live examination series.

Cambridge Assessment International Education is part of the Cambridge Assessment Group. Cambridge Assessment is the brand name of the University of Cambridge Local Examinations Syndicate (UCLES), which itself is a department of the University of Cambridge.

© UCLES 2021

PapaCambridge